Cooking design center without oven

CX-5

Stainless steel

Item number: 927010075

- Storage Center + Cooktop.
- Height 36 15/16” – 37 3/8”.
- Width 50 1/2”.
- Depth 26 3/16”.
- To be integrated with Fagor’s 27” radiant cooktop or 28” gas cooktop.
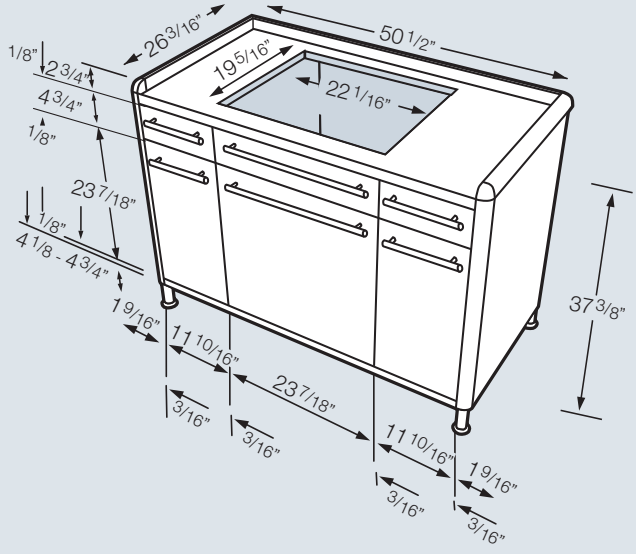
- Large capacity, two level side drawers.